# CR...DF Selbstzentrierender Andockrahmen

**Achtung:** Weil die Rahmen schwimmend gelagert sind, **muss die Anbauwand separat geerdet werden**. Die Erdung erfolgt nicht automatisch über den PE-Anschluss der Kontakteinsätze.

**HINWEIS:** Der Lieferumfang umfasst einen Andockrahmen und 4 Befestigungsschrauben mit Ausgleichskopf.

Für die Verwendung mit MIXO Modulareinsätzen CX 04 X wenden Sie sich bitte direkt an Ihre ILME-Regionalorganisation.

**Selbstzentrierender Andockrahmen**

| Beschreibung | Artikelbezeichnung |
|---|---|
| aus Edelstahl, passend für: | |
| Einsätze Größe „44.27" 1) oder MIXO-Halterahmen für 2 Module | **CR 06 DF** |
| Einsätze Größe „57.27" 1) oder MIXO-Halterahmen für 3 Module | **CR 10 DF** |
| Einsätze Größe „77.27" 1) oder MIXO-Halterahmen für 4 Module | **CR 16 DF** |
| Einsätze Größe „104.27" 1) oder MIXO-Halterahmen für 6 Module | **CR 24 DF** |

* außer CT, CTS und CTSE

**Technische Eigenschaften**
- Materialien
  - schwimmender Rahmen, Edelstahl
  - Befestigungsschrauben aus verzinktem Stahl
- Mechanische Lebensdauer: ≥ 500 Zyklen
- Ausgleichsmaße:
  - x-Achse: ± 1,5 mm
  - y-Achse: ± 1,5 mm

**Eigenschaften**
- passend für alle Kontakteinsätze (außer Anschlussverteiler Serien CT, CTS, und CTSE)
- besonders geeignet für den Einsatz von Steckverbindern hinter Einschüben auf Schleifringen, in Verbindung mit kuppelnden Werkzeughälften, generell in der Verkehrstechnik, der Windenergie und der Druckindustrie.
- ermöglicht das **selbstzentrierende Stecken zweier Steckverbinderhälften** an Anlagenteilen ohne Gehäuse. Die in die Rahmen eingebauten Steckverbindereinsätze werden über die Führungsbuchsen und Führungsstifte der Rahmen frühzeitig in Position gebracht, hierdurch wird eine Beschädigung der Einsätze vermieden.
  **Die Ausgleichsmaße betragen in x- und y-Richtung jeweils ± 1,5 mm**.

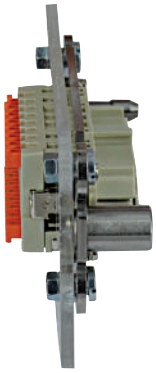

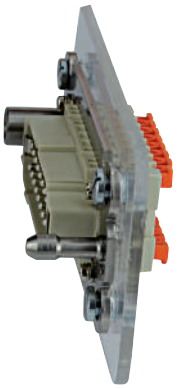

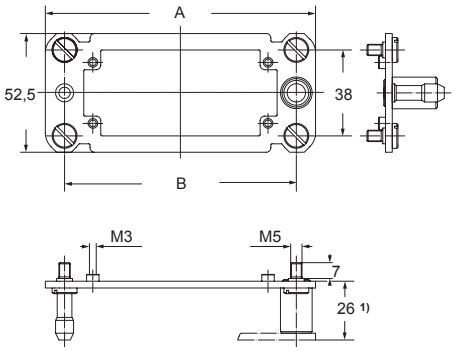


1) Abstand für elektrische und faseroptische Kontakte: max. 27 mm;
Abstand für Pneumatikkontakte: max. 26,5 mm.

Montageausschnitt

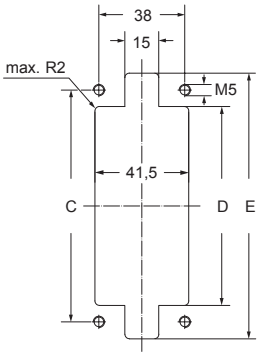


| Artikel | A | B | C | D | E |
|---|---|---|---|---|---|
| **CR 06 DF** | 86 | 69 | 69 | 54,5 | 84 |
| **CR 10 DF** | 99 | 82 | 82 | 67,5 | 97 |
| **CR 16 DF** | 119,5 | 102,5 | 102,5 | 88 | 117,5 |
| **CR 24 DF** | 146 | 129 | 129 | 114,5 | 144 |




Die angegebenen Abmessungen in mm sind nicht verbindlich. Technische Änderungen bleiben vorbehalten.

# BIG HOODS WITH INTEGRATED SPECIAL SELF-CENTRING FLOATING FRAME

Size “104.27” BIG hoods
available in 2x M40 top cable entries
and 1x M40 top cable entry
with integrated special self-centring
floating frame

Find more information on our products at www.ilme.com

# TECHNICAL FEATURES

# MBV 24.240D, MBV 24.240DG, MBV 24.40D, MBV 24.40DG

- These **special variants of the series BIG connector enclosures** (a series which is **proprietary ILME design**), available in the largest size “104.27”, consist of two hoods, one with edge gasket, the other without, both equipped with dedicated variant of robust stainless steel special self-centring floating frame.

- They are designed to allow electrical (power and signal) connection between two pieces of equipment (both fixed, one foreseen for frequent swap), guided by a dedicated special self-centring floating frame allowing **up to ±1,5 mm off axis in both directions on a plane**, to create an internal protected space for the wiring on both sides of the connection. This is particularly handy e.g. for the rapid change of the moulds on a moulding press machine.

- Thanks to the integrated *“key and keyway”* system (two sets of facing robust pin and contact tubes, one on each short side, mounted on custom-tailored robust stainless steel plates integrated in the mating face of the size “104.27” mating hoods) the connector inserts housed inside the hoods avoid mechanical damages during mating and take advantage of the protective large wiring space of the BIG enclosures.

- Thanks to the sealing gasket on the coupling, provided sufficient tight closure is ensured by the assembly on the machine (not possible to integrate any locking), the IP degree of protection up to IP66/IP67/IP69 may be achieved.

- Generously dimensioned stainless steel parts provide suitable mechanical robustness and resistance to corrosion.

- Available parts:
  - **MBV 24.240D** size “104.27” hood series BIG with **2x M40** top cable entries and integrated special self-centring floating frame, to be exclusively mated with:
  - **MBV 24.240DG** size “104.27” hood with gasket, series BIG, with **2x M40** top cable entries and integrated special self-centring floating frame;
  - **MBV 24.40D** size “104.27” hood series BIG with **1x M40** top cable entry and integrated special self-centring floating frame, to be exclusively mated with:
  - **MBV 24.40DG** size “104.27” hood with gasket, series BIG, with **1x M40** top cable entry and integrated special self-centring floating frame.

- These BIG special hoods are deemed to be used only in combination among themselves: one part without gasket, the mating part with gasket.

- Up to 10 000 matings are achievable once used with HNM inserts with HNM series R crimp contacts as applicable and MIXO HNM frames as applicable, up to 500 matings guaranteed using standard components within these special BIG enclosures.

- Tolerance for off-axis displacement (allowed by the integral self-centring floating frame): x ± 1,5 mm, y ± 1,5 mm.

**BIG special hoods with integrated special self-centring floating frame allow guided, frequent swops avoiding damages and ingress of contaminants**

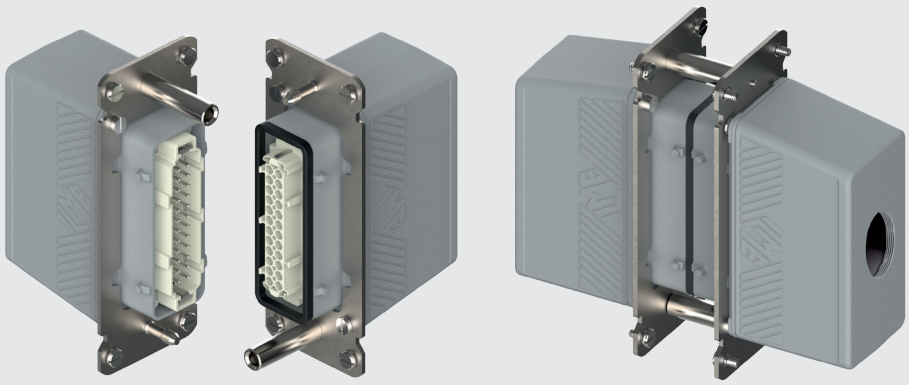

# MBV BIG hoods with integrated special self-centring floating frame

| inserts | | page: |
|---|---|---|
| **CD** | 64 poles + ⏚ | **72** |
| **CDD** | 108 poles + ⏚ | **81** |
| **CDS** | 42 poles + ⏚ | **-** |
| **CDSH** | 42 poles + ⏚ | **89** |
| **CNE** | 24 poles + ⏚ | **113** |
| **CSE** | 24 poles + ⏚ | **-** |
| **CSH** | 24 poles + ⏚ | **113** |
| **CSH S** | 24 poles + ⏚ | **125** |
| **CCE** | 24 poles + ⏚ | **133** |
| **CMSH** | 10+2 (aux) poles + ⏚ | **140** |
| **CMCE** | 10+2 (aux) poles + ⏚ | **141** |
| **CSS** | 24 poles + ⏚ | **151** |
| **CT, CTSE** (16A) | 24 poles + ⏚ | **163** |
| **CQE** | 46 poles + ⏚ | **171** |
| **CQEE** | 64 poles + ⏚ | **177** |
| **CX** | 4/8 and 6/6 poles + ⏚ | **204, 206** |
| **MIXO** | 6 modules | **262 - 317** |

**refer to CN.19 pages**

**hoods with integrated special self-centring floating frame**

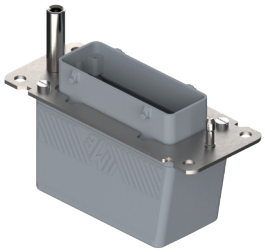

**FROM MAY 2020**

**hoods with integrated special self-centring floating frame and gasket**

**FROM MAY 2020**

| description | part No. | entry M | part No. | entry M |
|---|---|---|---|---|
| 1x M40 top entry | **MBV 24.40D** | 40 x 1 | | |
| 1x M40 top entry, with gasket | | | **MBV 24.40DG** | 40 x 1 |

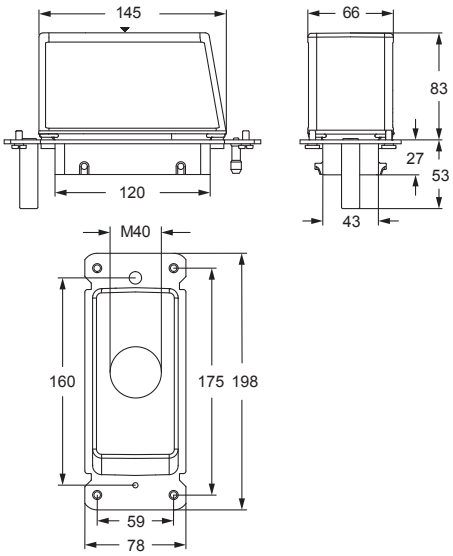


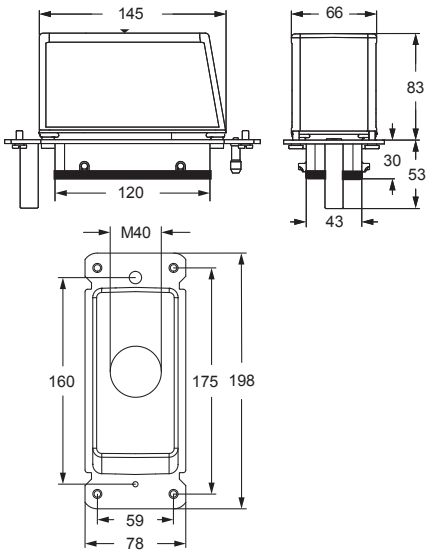


panel cut-out for enclosures

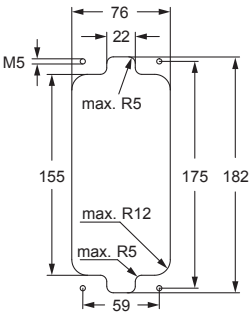


panel cut-out for enclosures

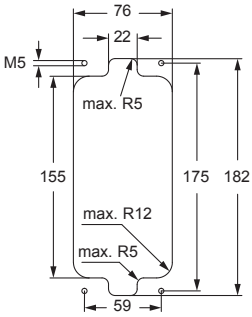


EN 60529 IP66 IP67 IP69 IEC 60529

**! CAUTION:** Due to the absence of locking means, the IP66/IP67/IP69 achievable degree of protection is demanded to the end-use application:

1) Suitable pressure, in order to uniformly compress the sealing gasket and keep the connector coupling tight is required: this condition is satisfied when the self-centring guide pins and contact tubes reach their end-of-run and are kept constantly in this position;
2) Suitably rated cable entry devices (e.g. cable glands) are required to maintain the desired IP degree of protection.

Protection against undue opening under load (connectors without breaking capacity) and closing under voltage is demanded to the end-use application, e.g. by suitable detection of such conditions.



dimensions shown in mm are not binding and may be changed without notice

# MBV BIG hoods with integrated special self-centring floating frame

| inserts | | page: |
|---|---|---|
| **CD** | 64 poles + ⏚ | **72** |
| **CDD** | 108 poles + ⏚ | **81** |
| **CDS** | 42 poles + ⏚ | **-** |
| **CDSH** | 42 poles + ⏚ | **89** |
| **CNE** | 24 poles + ⏚ | **113** |
| **CSE** | 24 poles + ⏚ | **-** |
| **CSH** | 24 poles + ⏚ | **113** |
| **CSH S** | 24 poles + ⏚ | **125** |
| **CCE** | 24 poles + ⏚ | **133** |
| **CMSH** | 10+2 (aux) poles + ⏚ | **140** |
| **CMCE** | 10+2 (aux) poles + ⏚ | **141** |
| **CSS** | 24 poles + ⏚ | **151** |
| **CT, CTSE** (16A) | 24 poles + ⏚ | **163** |
| **CQE** | 46 poles + ⏚ | **171** |
| **CQEE** | 64 poles + ⏚ | **177** |
| **CX** | 4/8 and 6/6 poles + ⏚ | **204, 206** |
| **MIXO** | 6 modules | **262 - 317** |

**refer to CN.19 pages**

**hoods with integrated special self-centring floating frame**

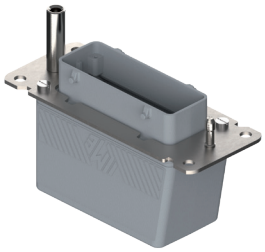

**FROM MAY 2020**

**hoods with integrated special self-centring floating frame and gasket**

**FROM MAY 2020**

| description | part No. | entry M | part No. | entry M |
|---|---|---|---|---|
| 2x M40 top entries | **MBV 24.240D** | 40 x 2 | | |
| 2x M40 top entries, with gasket | | | **MBV 24.240DG** | 40 x 2 |

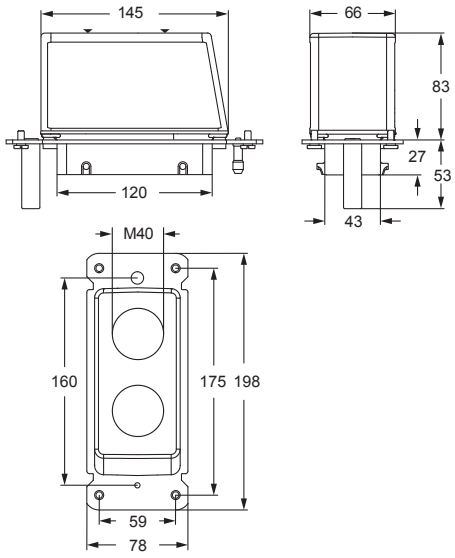


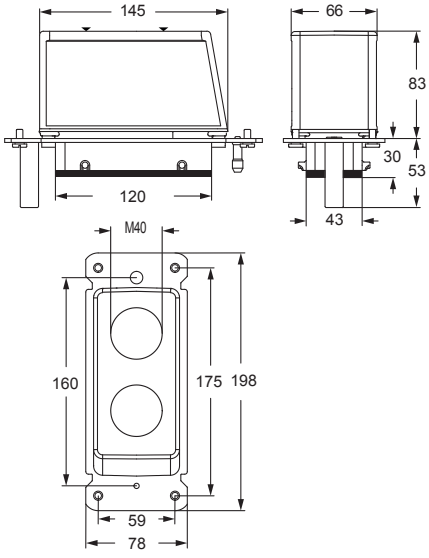


panel cut-out for enclosures

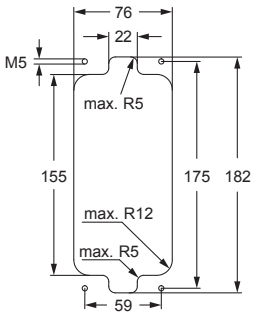


panel cut-out for enclosures

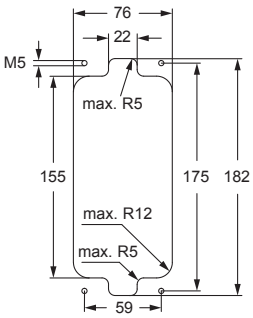


EN 60529 IP66 IP67 IP69 IEC 60529

**! CAUTION:** Due to the absence of locking means, the IP66/IP67/IP69 achievable degree of protection is demanded to the end-use application:

1) Suitable pressure, in order to uniformly compress the sealing gasket and keep the connector coupling tight is required: this condition is satisfied when the self-centring guide pins and contact tubes reach their end-of-run and are kept constantly in this position;
2) Suitably rated cable entry devices (e.g. cable glands) are required to maintain the desired IP degree of protection.

Protection against undue opening under load (connectors without breaking capacity) and closing under voltage is demanded to the end-use application, e.g. by suitable detection of such conditions.

# MBV BIG hoods with integrated special self-centring floating frame

## ASSEMBLY INSTRUCTIONS

## BIG HOODS WITH INTEGRATED SPECIAL SELF-CENTRING FLOATING FRAME

### 1 HOOD CLOSING

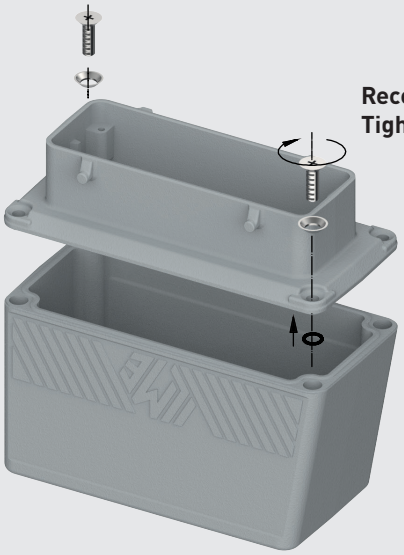

Reccommended size of screwdriver: Ph2
Tightening torque: 1,6 Nm

### 2 SPECIAL SELF-CENTRING FLOATING FRAME ASSEMBLY

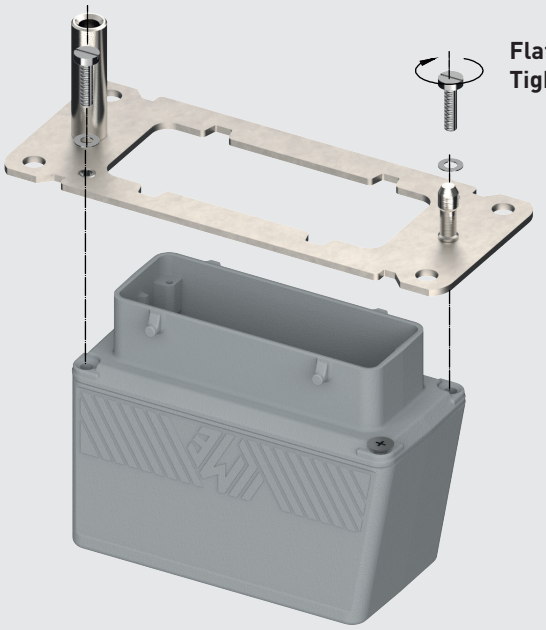

Flat screw driver 10,0 x 1,2 mm
Tightening torque: 1,8 Nm

### 3 INSTALLATION ON THE PANEL

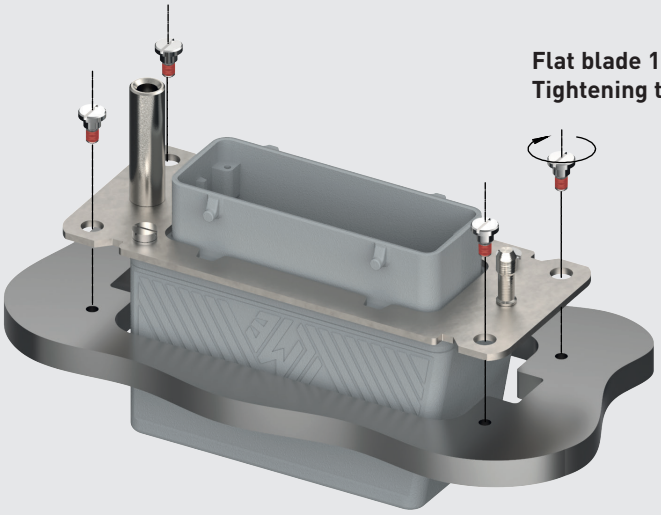

Flat blade 10,0 x 1,2 mm
Tightening torque: 2,5 Nm



dimensions shown in mm are not binding and may be changed without notice

# MBV BIG hoods with integrated special self-centring floating frame

## 4 INSTALLATION ON THE PANELS

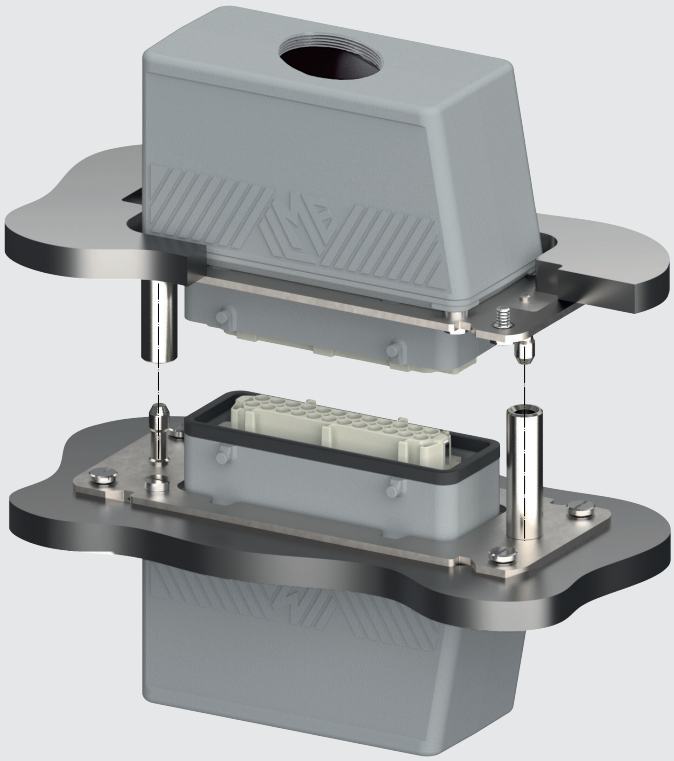

## 5 CLOSING DISTANCE BETWEEN PANELS TO ACHIEVE IP DEGREE OF PROTECTION

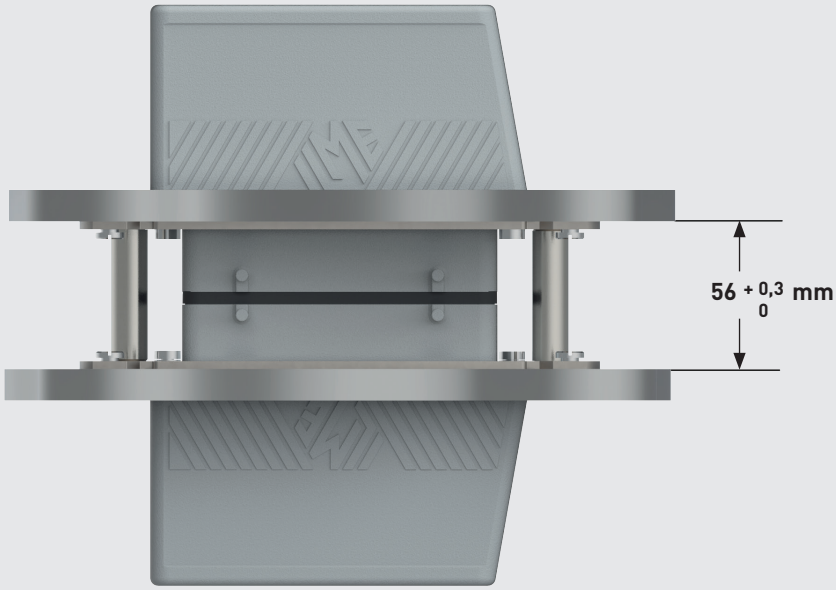

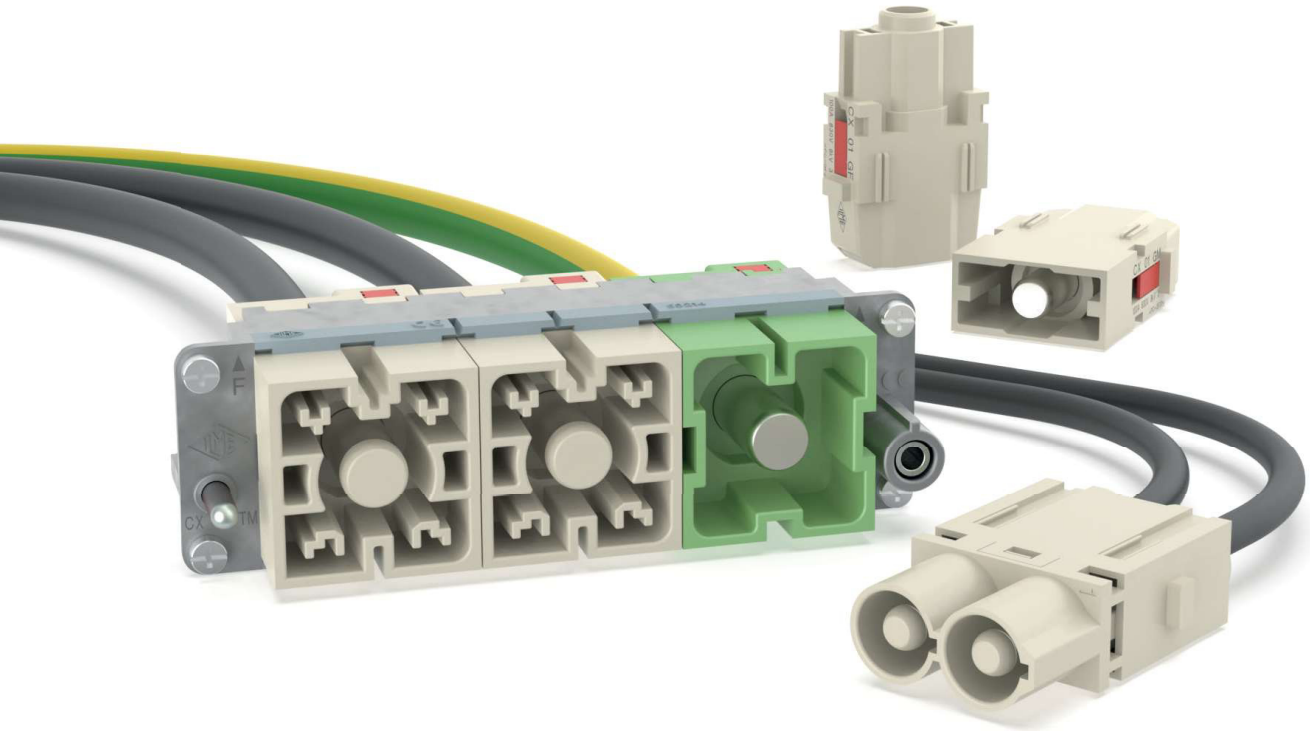

# PE modules for MIXO frames

## MIXO CX 01 PE

These single-sized modular inserts (male and female) can be combined with all modules requiring the transfer of the PE line in mating connector parts only when mounted in the **CX 02 /03 /04 /06 PDF /PDM** plastic docking frame corresponding part.

The module has a fool-proof keying in order not to allow its installation and use in a metallic frame of MIXO series. In fact, this PE module is not deemed to provide equipotential bonding between the power PE contact and the metallic frame. Not compatible with CX 01 GPE.

- "First-make, last-break" function versus any line contact in nearby.

The screw-type terminal can accept PE lines:

- unprepared flexible (class 5) or rigid (class 1) copper conductors: from 2,5 $mm^2$ / AWG 14 to 16 $mm^2$ / AWG 6;
- prepared (ferruled) flexible (class 5) copper conductors: from 1,5 $mm^2$ / AWG 16 to 16 $mm^2$ / AWG 6.

## MIXO CX 01 GPE

The MIXO modular connector series can employ the 1-slot-sized PE module for series CG (100 A) crimp contacts, connecting protective earth lines with large conductor cross sectional areas ranging from 10 $mm^2$ / AWG 8 to 35 $mm^2$ / AWG 2.

This PE module is particularly suitable in combination with CX 01 GF /M (1-pole, 1-slot sized) and CX 02 GF /GM (2-pole, 2-slot sized) 100 A modules once keeping the same size for the PE wire and the power (phase/neutral) wires so that special multi-core cables with reduced PE size are no longer required.

- "First-make, last-break" function versus any line contact in nearby;
- integrated PE springs for bonding to MIXO frames (both sides).

Watch our clip

## FOCUS

### CX 01 GPE insert's features

- The 1-slot sized PE module allows the connection of PE lines with large conductor cross sectional areas ranging from 10 mm² / AWG 8 to 35 mm² / AWG 2.

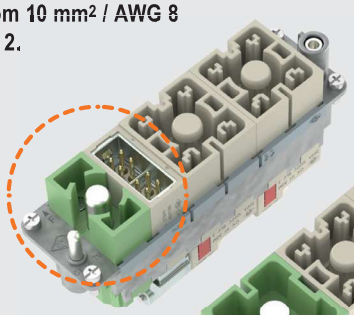

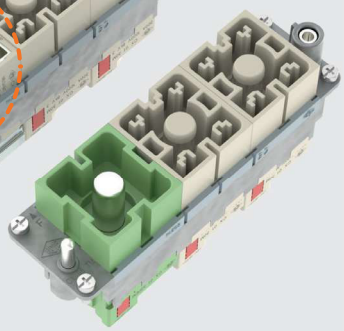

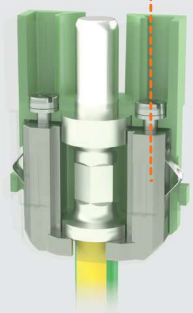

- Metallic contact holders to retain the PE crimped contact and ground to the MIXO frame.

- CX 01 GPE modules allow leaving space for an additional single-sized module when e.g. 2× CX 01 YF /M for a 1-phase circuit are required in a 6-slots MIXO frame.

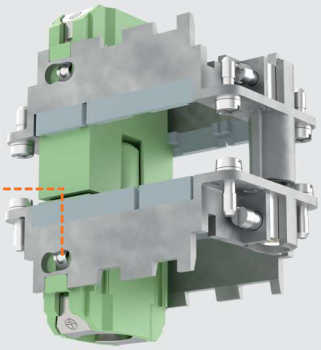

- Integrated PE springs for bonding to MIXO frames (both sides).

## FOCUS

### CX 01 PE fool-proof keying

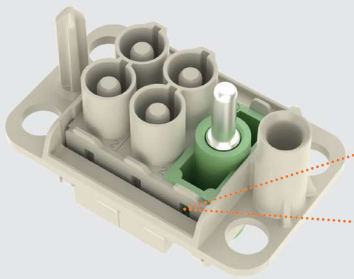

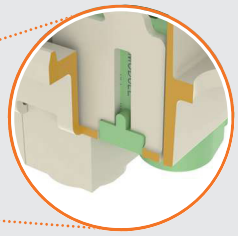

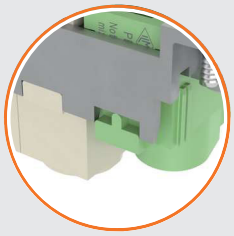

- The CX 01 PE module has a fool-proof keying in order not to allow its installation and use in a metallic frame of MIXO series.
- ALLOWED
- NOT ALLOWED!

# CX 01 GPE

size **1 module**

**1 PE pole**

## Crimp connection

| | |
|---|---|
| EN 61984 rating | — |
| Rated voltage (UL / CSA) | — |
| Insulation resistance | — |
| Contact resistance | **≤ 0,3 mΩ** |
| Ambient temperature limit | **-40 °C ... +125 °C** |
| Mechanical life (cycles) | **≥ 500** |

CE UKCA (pending: EAC)

(pending: CQC, DNV and BV)

(pending: cURus)

| Item | Description | Part No. | Dimension |
|---|---|---|---|
| | PE male insert for male contact<br><br>Without contact (to be ordered separately) | CX 01 GPEM | 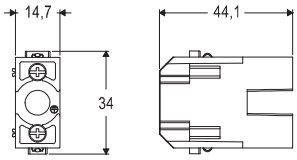  |
| | PE female insert for female contact<br><br>Without contact (to be ordered separately) | CX 01 GPEF | 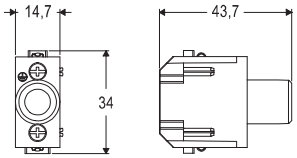  |

**100 A crimp contacts**

| section (mm²) | section (AWG) | | Male | Female |
|---|---|---|---|---|
| 8-10 | 8-7 | silver | CGMA 10 | CGFA 10 |
| 16 | 6-5 | | CGMA 16 | CGFA 16 |
| 25 | 4-3 | | CGMA 25 | CGFA 25 |
| 35 | 2 | | CGMA 35 | CGFA 35 |

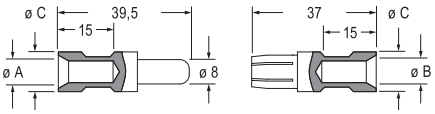


**Wiring information, CG contacts**

| conductor section (mm²) | conductor slot ø A (mm) | conductor slot ø B (mm) | conductor slot ø C (mm) | stripping length (mm) |
|---|---|---|---|---|
| 8-10 | 4,3 | 4,3 | 13 | 15 |
| 16 | 5,5 | 5,5 | 13 | 15 |
| 25 | 7,0 | 7,0 | 13 | 15 |
| 35 | 7,9 | 8,2 | 12,5 | 15 |

Wire diameter: up to 11,5 mm.

**It is recommended to use the crimping tools and removal tools homologated by ILME (please see page F.23)**

Watch our clip

**Materials**

| | |
|---|---|
| Insert | polycarbonate (PC) |
| UL 94 flame rating | V-0 |
| Colour | green, RAL 6011 |
| Contacts | copper alloy, silver plated |

| Accessories | Pages |
|---|---|
| **MIXO Frames** | |
| Metal frames for modular units | C.94-95 |
| Thermoplastic docking frames | C.98-101 |
| **Enclosures** | |
| Insulating MIXO holder | C.103 |
| MIXO ONE | C.106-107 |
| MIXO TWO | C.110-111 |

Can be used in bulkhead mounting housings or in high construction housings or in high construction hoods.



dimensions shown in mm are not binding and may be changed without notice

# CX 01 PE

size **1 module**

**1 PE pole**

## Screw connection

| | |
|---|---|
| EN 61984 rating | — |
| Rated voltage (UL / CSA) | — |
| Insulation resistance | — |
| Contact resistance | **≤ 0,3 mΩ** |
| Ambient temperature limit | **-40 °C ... +125 °C** |
| Mechanical life (cycles) | **≥ 500** |

CE UKCA (pending: EAC)

(pending: CQC, DNV and BV)

(pending: cURus)

| Item | Description | Part No. | Dimension |
|---|---|---|---|
| | PE male inserts with male contacts<br>Screw terminal connection | CX 01 PEM | 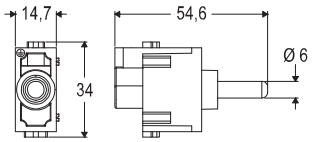  |
| | PE female inserts with female contacts<br>Screw terminal connection | CX 01 PEF | 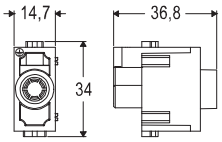  |

MIXO

C

### Materials

| | |
|---|---|
| Insert | polycarbonate (PC) |
| UL 94 flame rating | V-0 |
| Colour | green, RAL 6011 |
| Contacts | built-in, copper alloy, silver plated |

### Wiring information

| | |
|---|---|
| Wire cross sectional area | |
| - unprepared | 2,5 mm² - 16 mm² (AWG 14-6) |
| - prepared | 1,5 mm² - 16 mm² (AWG 16-6) |
| Stripping length | 14 mm |
| Terminal screw torque | 2,5 Nm (22.2 lb.in) |

| Accessories | Pages |
|---|---|
| **MIXO Frames** | |
| Thermoplastic docking frames | C.98-101 |